RESEARCH & MFG. CORP OF AMERICA
Ramcoa
MADE IN USA MANUFACTURER OF AFTERMARKET SUSPENSION COMPONENTS
1130 W. Elizabeth Ave. Linden, NJ 07036 * Tel 908.862.6744 * Fax 908.862.6748 * WWW.RAMCOA.COM

BAR-573

Improved Design!

Front Suspension

Front Left & Right

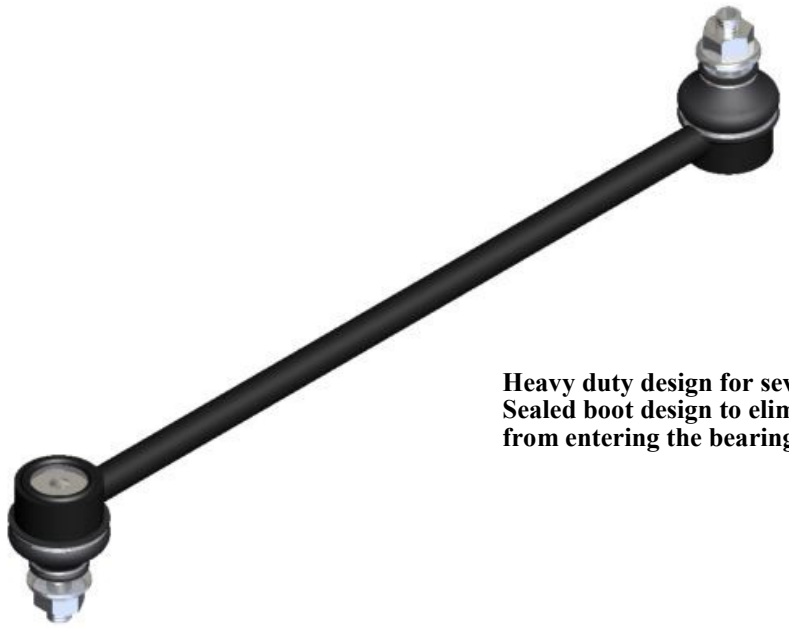

Heavy duty design for severe duty use!
Sealed boot design to eliminate contaminants from entering the bearing surfaces!

Napa #	McQuay #	Moog #	TRW #
		k80852	

APPLICATIONS:

Year	Make	Model	Location	Qty / Vehicle
2008-2009	Buick	Allure	Front	2
2008-2009	Buick	LaCrosse	Front	2
2005-2007	Buick	Terraza	Front	2
2005-2009	Chevrolet	Uplander	Front	2
2004-2008	Pontiac	Gran Pre	Front	2
2005-2009	Pontiac	Montana	Front	2
2005-2007	Saturn	Relay	Front	2

Manufactured in the USA

2016

2016

Rev:**B**